Round format fix downlight from the TROLL family Optics Comfort.

DESCRIPTION

Round format fix downlight from the TROLL family Optics Comfort setting an advanced and innovative thermal balance system through passive dissipation with stable colour temperature of 3000º K (warm white) optimised to be used as general indoor lighting for offices, hospitals commercial areas or residential & contract spaces. Designed for ceiling recessed installation. Luminaire body built in sinthetic material and aluminium heat-sink with finishes in white. Luminaire is IP20. Luminaire built-in an high efficiency reflector made of high vacuum aluminised policarbonate with an angle beam of 80º. Luminaire sets a 31,5 W LED source with CRI higher than 80 % and a chromatic dispersion lower than 3 SMCD. Luminaire UGR<19. Fixture has a luminous flux of 3669 Lm, with an efficiency of 101,9 Lm/W and a total consumption of 36 W. The average life for the luminaire is 60000 h (stabilised at a minimum flux of 70 % from the original). Luminaire built-in an electronic control gear with emergency kit fed at 220-240V; 50/60 Hz.

Item code	**11.1703.3304.33**
Product type	**Indoor Lighting**
Category	**Recessed Downlights**
Family	**Optics**
Subfamily	**Optics Comfort**
Materials	**Luminaire body built in sinthetic material with aluminium heat-sink.**
Optical system	**Luminaire built-in a high efficiency reflcetor made of high vacuum aluminised policarbonate .**
Installation instructions	**Luminaire designed for ceiling recessed installation.**
Pictograms	

Dimensions	
Product dimensions (mm)	**Ø218 x 138**
Net weight (g)	**743**
Drilling hole (mm)	**200**

Scheme

Scheme

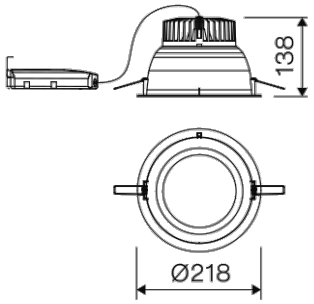

Product	
Real power (W)	**36**
Real luminous flux (Lm)	**3669**
Luminous efficiency (Lm/W)	**101,9**
Beam angle (º)	**80**
Life time (h)	**60000 (L90B10)**
IP	**IP40/20**
Electrical class insulation	**Class 2**
Operating temperature	**from -20°C to 35°C**
Electrical feeding	**220..240V, 50/60Hz**
Colour (RAL)	**White(9010)**
Energy efficiency class	**A+**

Control gear	
Control gear included	**Yes**
Control gear	**Electronic Control Gear & Emergency**
Power Factor	**0,98**
Flicker Free	**Flicker Free**

Light source	
Light source included	
Light source	**Led**
Type of LED	**CoB**
Nominal power (W)	**32**
Nominal luminous flux (Lm)	**5000**
Average life time (h)	**50000**
Colour temperature (K)	**3000**
Colour consistency (SDCM)	**3**
CRI	**80**

Photometry

Photometry

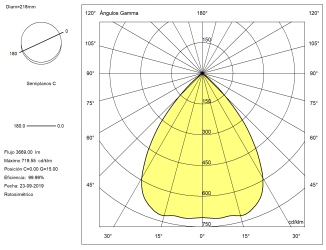
Diam=216mm
180
0
Semiplanos C
180.0
0.0
Flujo: 3068.00 lm
Máxima: 718.95 cd/klm
Posición: C=0.00 G=15.00
Eficiencia: 99.89%
Fecha: 23-09-2019
Rotosimétrica
Ángulos Gamma
120°
180°
120°
105°
105°
90°
90°
75°
75°
60°
60°
45°
45°
150
150
300
450
600
750
cd/klm
30°
15°
0°
15°
30°